ALL PSU DATA SHEET.

ECH Series, 2 Watt Isolated DC-DC Converter, (Dual Output).

(Miniature Encapsulated Single-in-Line Package, Option Of Dual-in-Line Style)

General Description,

The ECH series are cost effective 2 Watt dual output DC-DC converters. These converters achieve low cost and ultra-miniature SIP (single-in-line package) or DIP (dual-in-line package) size without compromising performance or field reliability.
Input voltages are available of 5, 12, 15, 24 or 48 volts DC, producing dual output voltages of between +/-3.3 to +/-18 Volts DC. Standard features include 1000 VDC input to output isolation (option of 3KVdc with ECH-xxxxS-Hi versions), high efficiency, and output voltage accuracy of +/-5% maximum.

All models are packaged in ultra-miniature 19.50 x 6.00 x 9.50mm single-in-line package (SIL) or the option of 20.32 x 10.16 x 6.85mm dual-in-line packaged (DIL). Operation is specified over the full operating temperature range of –40*C to +71*C with no derating required, Cooling is by free-air convection.

Electrical Specification,

Specifications typical at +25*C, nominal input voltage, rated output current unless otherwise specified.

Input Specifications:		**General Specifications:**	
Voltage Range	+/-10%	Efficiency	70% to 85%
Filter	Capacitor	Switching Frequency	85 KHz Typical
Isolation Specifications:		**Environmental Specifications:**	
Rated Voltage	1000 VDC (3KV)	Operating Temp (ambient)	-40*C to +71*C
Leakage Current	1 mA	Storage Temp	-55*C to +125*C
Resistance	10 to the 9 Ohm	Derating	None Required
Capacitance	60 pF, typical	Humidity	90% non-condensing
		Cooling	Free-air convection
Output Specifications:		**Physical Characteristics:**	
Voltage Accuracy	+/-5%, max	Dimensions	SIP 19.50 x 6.00 x 9.50mm
Voltage Balance (dual o/p)	+/-1%		DIP 20.32 x 10.16 x 6.85mm
Ripple & Noise (at 20 MHz BW)	75 mVp-p, max	Weight	2 g
Short Circuit Protection	1 Second	Case Material	Non-conductive black plastic
Line Voltage Regulation	+/-1.2%/1% Vin		
Load Voltage Regulation	+/-8%, load=20 to 100%		
Temperature Coefficient	+/-0.02%/*C		

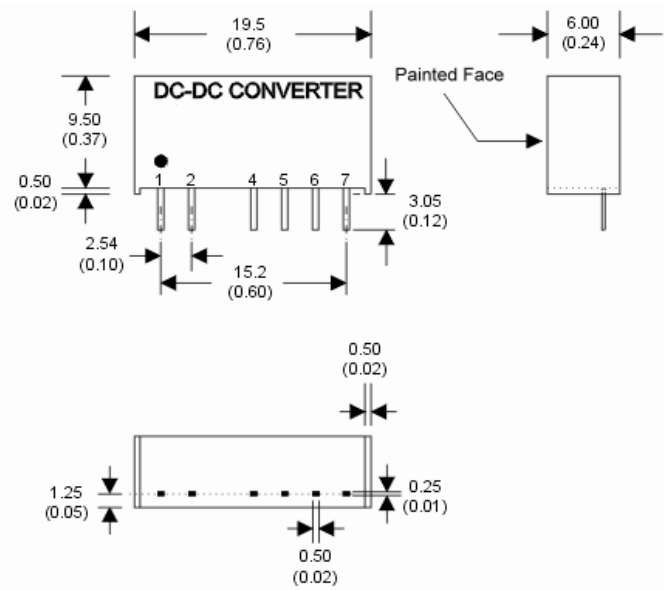

Mechanical Drawing & Pin Connections SIL, Single-In-Line Version.

	1 KV Isolation	3 KV Isolation
Pin	Connection	Connection
1	+V Input	+V Input
2	-V Input	-V Input
3	No Pin	No Pin
4	-V Out	No Pin
5	Common	-V Output
6	+V Out	Common
7	No Pin	+V Output

Please Enquire For Mechanical Drawing And Connections For DIL, Dual-In-Line Version,

Example Part Number ECH-0512S = 2 Watt, Input 5 Volts to Dual Outputs +/-12 Volts, SIL.

Further DC-DC Converters From ¼ Watt To 600 Watts Are Available And Can Be Seen Listed At www.allpsu.co.uk

Specifications may change without notice. E&OE. ALL PSU Terms & Conditions Apply.

ALL PSU Ltd, Unit D6 Laser Quay, Culpeper Close, Medway City Estate,
Rochester, Kent, ME2 4HU, Tel 01634 725527, Fax 01634 739111,
Email: sales@allpsu.co.uk, Web: www.allpsu.co.uk